Overview:

In this lesson, you will learn how to build a feedback and control system using a phototransistor and an LED. The skills from Units 1, 2, 3, and 4 will be required to complete this activity. Analog input will be used to monitor an ambient light sensor and analog output will be used to set the brightness of an LED. The system will continuously monitor the brightness of light in a room and then dynamically set the intensity of an LED based on a predetermined method written into a TI-Basic program running on a calculator that is connected to a TI-Innovator™ Hub.

Goals:

1. Describe examples of feedback and control systems.
2. Design and build a feedback and control system containing one sensor input and one device output.
3. Author a program that will monitor the sensor input and adjust the output according to a predetermined method.

Background:

A feedback and control system is designed to maintain some system parameter, such as temperature, at a given set-point value. Typically, this is accomplished by monitoring the parameter within a loop using a sensor and then applying an algorithm to affect the output of a device that modifies the parameter being monitored. This loop of monitoring and adjusting is called feedback and control.

Examples of these types of systems are found in all areas of science and engineering. For example in biology, thermal homeostasis is a feedback and control cycle that attempts to maintain the temperature of the human body at a normal body temperature of about 98°F. In feedback and control systems, normal body temperature is referred to as the “set-point;” this is the desired body temperature to be maintained by the system.

The human body has skin temperature sensors that are processed by the hypothalamus in the brain, when the body’s temperature falls below the normal 98°F set-point, the hypothalamus triggers an increase in the body’s metabolism and produces shivering in order to raise the core body temperature back up to the set-point. When the body’s temperature rises above the normal 98°F, the hypothalamus triggers sweating in order to produce evaporative cooling on the skin to lower the body’s temperature back down to the set-point. This cycle runs constantly in a living person to maintain normal body temperature.

Another example of a feedback and control system is the cruise control in a car. This system has a desired speed set-point that is established when a button is pressed by the driver. Next, the car’s computer chip monitors the vehicle’s speed using wheel rotation sensors. The chip then automatically controls the car’s throttle using mechanical actuators to maintain the set-point speed.

When the speed falls below the set-point, the motor throttle is opened to increase the car’s speed. When the speed is greater than the set-point, the motor throttle is closed to decrease the car’s speed. Cruise control is an example of a control system that uses a mathematical control algorithm called proportional-integral-derivative (PID) feedback. This sophisticated control method allows the system to respond very smoothly to changes in speed and will maintain a constant speed very close to the set-point.

©2016 Texas Instruments Incorporated

Materials and Tools:

- TI-84 Plus CE
- TI-Innovator Hub with USB Cable
- Needle nosed pliers (optional)
- Wire nippers (optional)
- TI-Innovator Breadboard Pack:
  - Breadboard
  - Male to Male Jumper Cable
  - Visible Light Sensor
  - Red LED
  - 10k Ohm Resistor (brown, black, orange)
  - 100 Ohm Resistor (brown, black, brown)

Build the Hardware:

Assemble the circuit in the diagram on the right by completing the following steps:

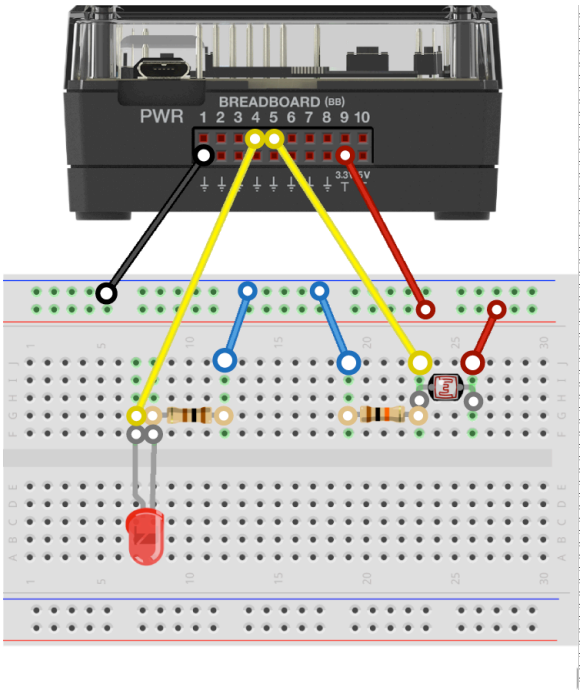

1. Place the LED on breadboard and use a yellow Male to Male Jumper Cable to connect the anode (+) of the LED to BB4 (analog out) on the TI-Innovator Hub.
2. Insert a 100Ω resistor in the same row as the cathode (-) leg of the LED, and use a blue Male to Male Jumper Cable to connect the opposite leg of the resistor to blue ground bus on the breadboard bus.
3. Insert the light sensor into the breadboard with legs in different rows. Use a red Male to Male Jumper Cable to connect the cathode (shorter) leg of the sensor to the red 3.3V bus on the breadboard.
4. Insert a10kΩ resistor into the row with the opposite anode (longer) leg of the light sensor.
5. Use a blue Male to Male Jumper Cable to connect the opposite leg of the resistor to the blue ground bus on the breadboard.
6. Use a yellow Male to Male Jumper Cable to connect the junction between the 10kΩ resistor and the light sensor to BB5 (analog input) on the TI-Innovator Hub.
7. Use a red Male to Male Jumper Cable to connect the red 3.3V breadboard bus to the 3.3V pin on the TI-Innovator Hub.
8. Use a black Male to Male Jumper Cable to connect the blue ground bus on the breadboard to any ground pin on the TI-Innovator Hub.
9. Double-check all connections on breadboard and TI-Innovator Hub.
10. Plug the “B” end of the unit-to-unit USB cable into the TI-Innovator Hub and then the “A” end into the handheld device.

©2016 Texas Instruments Incorporated

Write the Software for the TI-84 Plus CE:

Write a program that reads the ambient light from the light brightness sensor and then adjusts the output brightness of the LED such that when the room is dim, the LED is brighter and when the room is bright, the LED is dimmer. Use analog input to monitor light sensor and analog output to set the LED brightness.

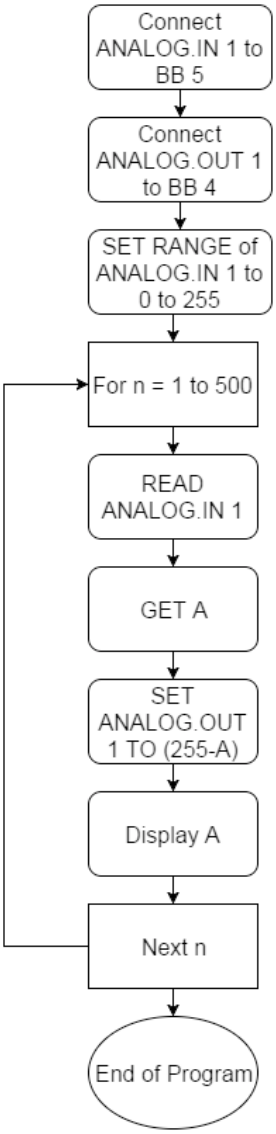

Extra For Experts:

Write a program that prompts user for a light brightness set-point. When the ambient light drops below the set-point, turn on the LED.