Overview:

This activity uses the calibrated digital thermometer from Unit 5 and incorporates this device into a feedback and control system. The system will use a hand-built electric heater that is placed in an insulated "living chamber" for a small reptile, such as a cardboard box or small cooler. A program will then maintain a thermal profile for an extended period of time. Temperature data will be collected and graphed to evaluate system performance.

Goals:

1. Apply skills of analog input, analog output, calibration and TI-Basic programming.
2. Integrate the digital thermometer constructed and calibrated during Unit 5 into a useful device.
3. Design and construct an electric heater that uses an external power source and Ohmic heating.
4. Design and build a small, well-insulated living chamber for a reptile with a thermometer and heater built into the chamber.
5. Author a TI-Basic program that manages the heater to maintain a desired thermal profile.
6. Assess the performance of system using real data.

Background:

The electrical resistance of a wire is the opposition to the passage of electric current (electrons) through that wire. The resistance of electricity in a wire is similar to the resistance of water passing through a water pipe. Three physical factors affect how easily water flows through a water pipe.

For example, a large diameter pipe (cross section area) gives the water more room to move through the pipe, more easily. Also, the longer the pipe (length), the more contact between the water and the pipe. Long pipes make it more difficult for water to move through the pipe. Lastly, if the pipe were filled with sand or gravel (resistivity of material), it would be more difficult to push the water through the pipe.

The electrical resistance of a wire is similar. Three factors affect the resistance of a piece of wire; the length of wire, the metal the wire is made from, and the diameter or gauge (AWG). In this activity, a 1.5m length of 26AWG copper wire is wound into a coil of loops. The coil will have about .5Ω of resistance. This small resistance will allow a large amount of electricity (current) to flow through the coil loops.

The electrical energy possessed by the current is changed into heat by a process called "Ohmic heating". The amount of Ohmic heat produced by the coil is proportional to the squared value of the current passing through the coil. The amount of current flowing through the coil, and resulting heat produced, is controlled with an TTL Power MOSFET and ANALOG.OUT as was studied in the Unit 3 Skill Builders and project.

When heat flows from the coil into the surrounding air, the temperature of the air rises. The rise in air temperature is monitored with the TI Analog Temperature Sensor and ANALOG.IN as was studied in the Unit 4 Skill Builders and project.

The heat produced by the coil could be used to keep a lizard warm and happy. Lizards are reptiles and are poikilothermic (cold-blooded) organisms. This means the organism's body temperature is not regulated to always be the same (warm-blooded) and is therefore the same temperature as the surrounding air. This is why reptiles hibernate during cold winter months. Building a heater than can control the temperature of a lizard's living chamber within a healthy range will keep the lizard happy all year long!

©2016 Texas Instruments Incorporated

Materials and Tools

- TI-84 Plus CE
- TI-Innovator™ Hub with USB Cable
- TI-Innovator Breadboard Pack:
  - Breadboard
  - Male to Male jumper wires
  - Male to Female jumper wires
  - 4-AA battery pack.
  - TTL Power MOSFET
  - TI Analog Temperature Sensor digital thermometer from Unit 5.
- 2 meters 26 AWG copper magnet wire
- Drinking straw or Pyrex test tube
- Small cardboard box or Styrofoam cooler.
- Scissors
- Hot glue gun
- Tape
- Paper towels
- Sandpaper
- Needle nose pliers (optional)
- Wire nippers (optional)
- 1 small lizard (optional)

Build the Hardware:

It will be helpful to review the Unit 5 project to assist hooking up the TI Analog Temperature Sensor and the Unit 3 Skill Builder to assist hooking up the TTL Power MOSFET.

1. Insert a red Male to Male Jumper Cable from the TI-Innovator Hub 3.3V to the red power bus on the breadboard.
2. Insert a black Male to Male Jumper Cable from any ground on the TI-Innovator Hub to the blue ground bus on the breadboard.
3. Wrap 1.5 meters of 26AWG wire around a plastic straw or Pyrex test tube. Leave a 10 cm length of wire unwound at the start and end of the wrapping. Wrap wire tightly into 3 cm wide bundle. After wrapping wire, twist the remaining 10 cm ends together leaving about 2 cm untwisted to be inserted into the breadboard.
4. Use sandpaper or a sharp edge to remove 1 cm of enamel insulation from the two ends of the wire wrap. These bare ends will be inserted into the breadboard.
5. Insert the TTL Power MOSFET into the breadboard as show in the diagram.
6. Connect a blue Male to Male Jumper Cable from BB4 on the breadboard connector to the far left leg (Gate) of the TTL Power MOSFET.
7. Insert one of the stripped heater wires into the breadboard column common with the middle leg (Drain) of the TTL Power MOSFET.
8. Connect the other stripped heater wire into the positive (red) 6.5V battery bus on the breadboard.
9. Connect a Male to Male Jumper Cable going from either ground bus to the far right leg of the TTL Power MOSFET (Sink).
10. Use a black Male to Male Jumper Cable to connect the ground (blue) on the 3.3V bus to the ground (blue) on the 6.5V bus.

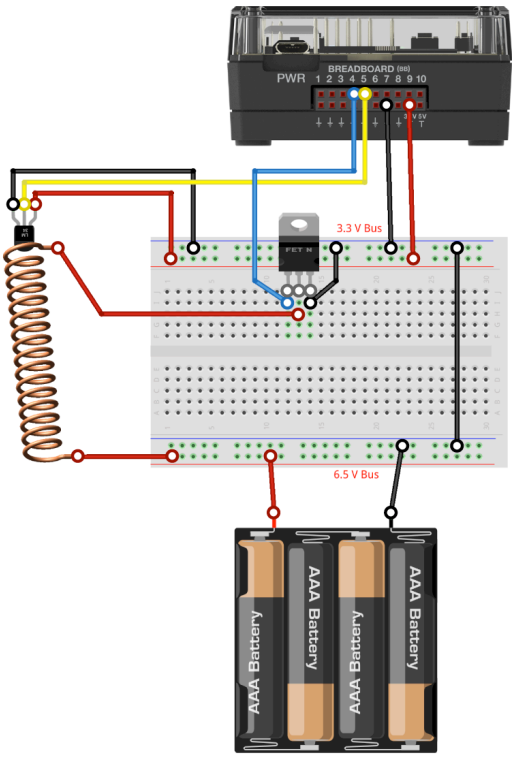

TI Analog Temperature Sensor

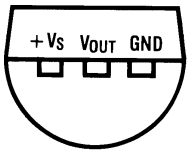

BOTTOM VIEW

V_s-Red wire, V_{out}-Yellow wire, GND-Black wire

- The battery and TI-Innovator Hub must share a common ground.

11. Connect the TI Analog Temperature Sensor temperature sensor as directed in the Unit 5 project to your breadboard.
12. Double-check all connections for accuracy up to this point. Lastly, connect the black wire (-) of the 4-AA battery pack to the 6.5V bus ground (blue) and the red wire (+) to the 6.5V power bus (red).
13. Touch the TTL Power MOSFET to check for heating. If the TTL Power MOSFET gets hot, IMMEDIATELY disconnect the battery and TI-Innovator Hub. Double-check all connections.
14. Plug the B end of the “unit to unit” USB cable into the TI-Innovator Hub and then the A end into the handheld device.

TTL Power MOSFET Diagram

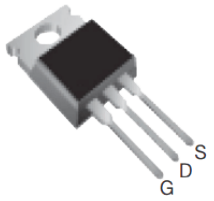

G- gate, D- drain, S- sink

Write the Software for the TI-84 Plus CE:

Example Code for the TI-84 Plus CE:

```
Send("BEGIN"):Get(Str0):Disp Str0
Send("CONNECT ANALOG.IN 1 TO BB5")
Send("CONNECT ANALOG.OUT 2 TO BB4")
Input "SET POINT =",S
Input "TEMP M =",M
Input "TEMP B =",B
While 1
Send("READ ANALOG.IN 1")
Get(X)
M*X+B→T
Disp "TEMPERATURE = ",T
If T<S
Then
Send("SET ANALOG.OUT 2 TO 100")
Disp "HEATER IS ON"
Else
Send("SET ANALOG.OUT 2 TO 0")
Disp "HEATER IS OFF"
End
Wait .1
End
```

Task:

Write a program that applies a feedback and control method to monitor the temperature sensor using analog input and to set the power of an electric heater using analog output. The program should prompt the user for a temperature set-point. Be sure to incorporate the calibration code from the Unit 5 project to output temperature in centigrade degrees.

Extra for Experts:

Temperature profiles are important to control temperature-sensitive processes, such as circuit board fabrication. Modify the control program to follow a temperature profile that raises the temperature up to 35◦C and holds it for 60 seconds. Then allow cooling to room temperature.