Volume

ID: 9689

Time required
45 minutes

Activity Overview

Students define right and oblique three dimensional figures and calculate the volume for prisms, pyramids, cylinders, and cones. Then, they will use multiple representations to explore properties of area and volume.

Topic: Three-Dimensional Geometry

- *Calculate the volume of a prism or cylinder (including oblique prisms and cylinders).*
- *Calculate the volume of a pyramid or cone (including oblique pyramids and cones).*

Teacher Preparation and Notes

- *This investigation offers opportunities for review and consolidation of key concepts related to area and volume.*
- *Begin by discussing aspects of three dimensional figures with respect to calculating volume.*
- *This activity is designed to be teacher-led.*
- *Notes for using the TI-Nspire™ Navigator™ System are included throughout the activity. The use of the Navigator System is not necessary for completion of this activity.*
- ***To download the student TI-Nspire document (.tns file) and student worksheet, go to education.ti.com/exchange and enter "9689" in the quick search box.***

Associated Materials

- *Volume_Student.doc*
- *Volume.tns*

Suggested Related Activities

To download any activity listed, go to education.ti.com/exchange and enter the number in the quick search box.

- *Making Hay While the Sun Shines & Not Losing It in the Rain (The Geometry of the Big Round Bale (TI-Nspire technology) — 10559*
- *The Painted Cube (TI-Nspire technology) — 8249*

Problem 1 – Rectangular prisms

Instruct students to read page 1.2 and 1.3. Then on page 1.4, students should drag the vertices of the prism and explore the various shapes it takes on. Prompt students to take notice as to which vertex affects the length, width, and height of the prism.

You may want to discuss the difference between oblique and right rectangular prisms so students can answer the questions on page 1.5 and 1.6.

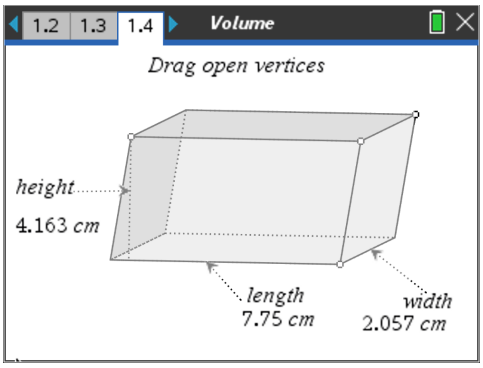

On page 1.8, the figure shows a right prism whose base is a parallelogram. The base has been "dissected" from the prism.

Students should use the **Calculate** tool from the Actions menu to first find the area of the base (dissected parallelogram). To do so, have them select the area formula and then the length and width of the parallelogram as illustrated.

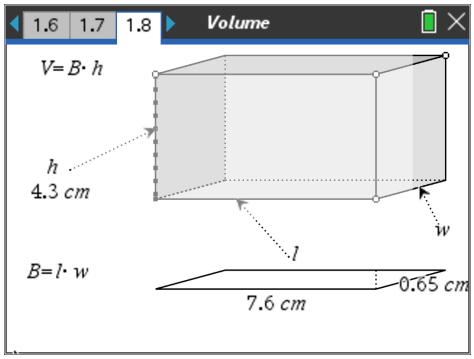

Next, students are to follow the same procedure to calculate the volume—selecting the volume formula, then the result for the area for *B*, and finally the *h* value. (Students answers will vary based on the shape and size of their prisms.)

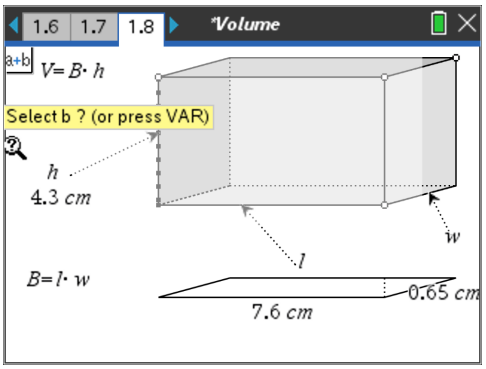

TI-Nspire Navigator Opportunity: *Screen Capture*

See Note 1 at the end of this lesson.

Problem 2 – Triangular prisms and pyramids

Students are asked to find the volume of the triangular prism, found on page 2.2, by following the same steps as the rectangular prism; that is, they will first find the area of the base and then use the resulting value, along with the height, to find the volume. Again, the area and volume values will vary, depending on students' prisms.

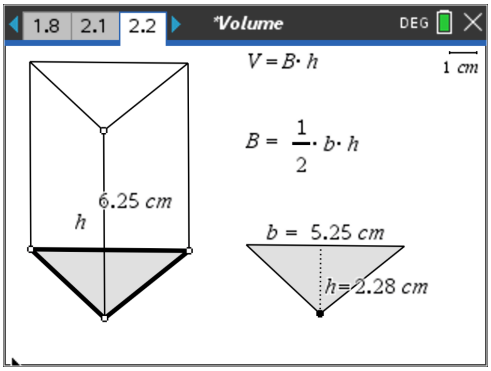

Before moving to page 2.4, it would be beneficial to discuss the difference between prisms and pyramids.

On page 2.4, students are asked to find the volume of a triangular pyramid. They should use the formula, the displayed measurements, and **Calculate** tool as before.

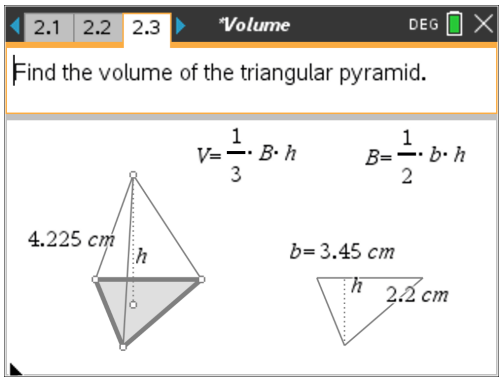

Problem 3 – Cylinders and Cones

Page 3.1 displays a right cylinder. As before, students can drag the open points to change the height and radius of the base.

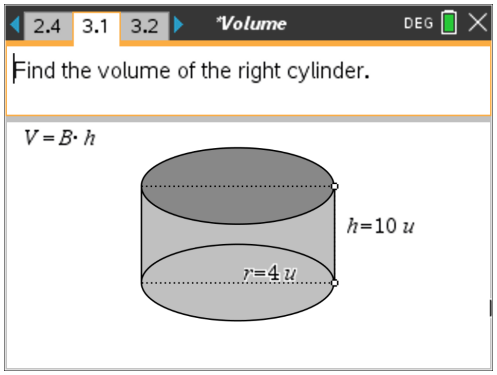

TI-Nspire Navigator Opportunity: *Quick Poll*

See Note 2 at the end of this lesson.

To find the volume of the cylinder, students need to use the **Text** and **Calculate** tools from the Actions menu to display and evaluate the formula for the area of the base (a circle). The pi key (π) is located in the lower left corner of the keypad. This value is then used in conjunction with the height to find the volume of the cylinder.

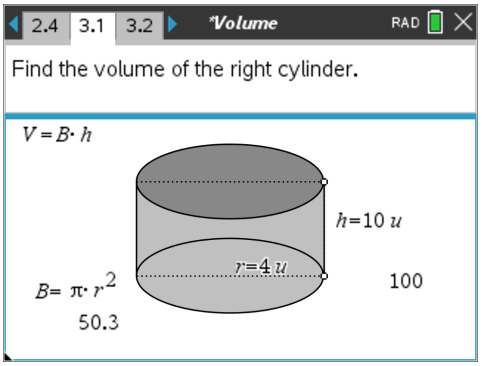

Note that the "*B*=" part of the formula must be in a separate text box.

Students are asked to write out the steps they used to find its volume on page 3.2. You may choose to have the students write in the document or on separate sheets of paper.

The final figure that students encounter is a cone on page 3.4. They should use the same process as they did on page 3.1 to calculate the volume of the cone. Students should observe that if a cone and a cylinder have the same radius and same height, the volume of the cone is one-third the volume of a cylinder.

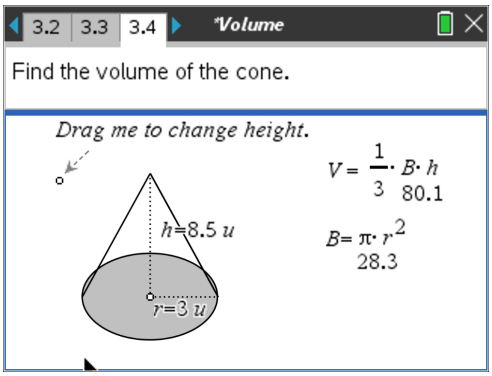

TI-Nspire Navigator Opportunities

Note 1
Problem 1, *Screen Capture*
This would be a good place to do a screen capture to verify students are able to drag the vertices of the figure and use the **Calculate** function. Throughout the activity, screen captures can be used to verify students are able to complete the activity.

Note 2
Problem 3, *Quick Poll*
You may choose to use Quick Poll throughout the activity to assess student understanding. The worksheet questions can be used as a guide for possible questions to ask.